MRL # 22 ~ "DX MARVEL" CRYSTAL

D. Page # 45
(From BP # 25)

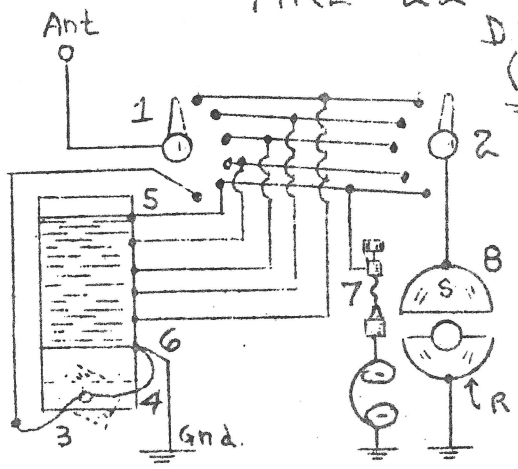

PICTORIAL DIAGRAM

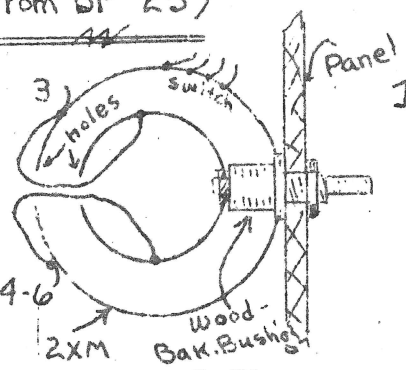

MAKING COUPLER

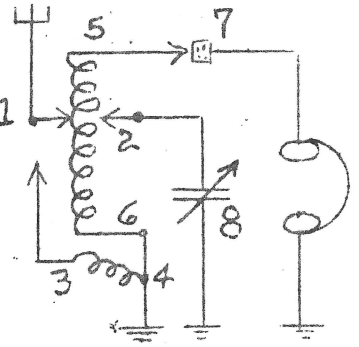

SCHEMATIC DIAGRAM

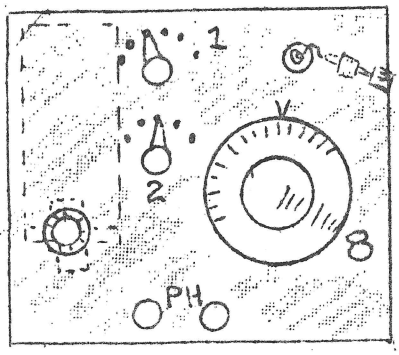

PANEL - Front View

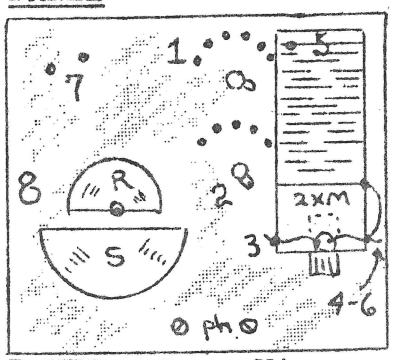

PANEL - Rear View

LIST OF PARTS

1 .0005 or .00035 Var.Cond. (8) 1 3" dial
1 MRL #22 Cell.Coil complete (1.00) (3-4-5-6)
2 Switch levers 11 Switch points 4 SW stops
1 Crystal Stand 1 Arrow Knob 4 Bind.Posts
1 MRL Steel Galena Crystal & Catwhisker
1 Composition panel, 1/8" x 7" x 8"

PARTS FOR COUPLER-COIL (If U make it)

1 MRL 2XM Cell. Form(2" x 4½" long)
100 ft. #22 DCC wire 1 Bak. tubing 1½" x 1" long
1 Bak. or wood bushing; shaft; lugs, etc.
Hardware, Busbar, Hookup wire, solder, etc.

- - - -

We have had some wonderful results with this set, due to it's being well constructed and properly laid out. Being closely coupled to the Aerial, it should make some good distance records.

COIL: Take a MRL 2XM form, and from the end with the small ring, - wind 54 Ts #22 DCC and tap it at 14-27-39-48-54, and run leads out for switch pts. When making taps, run a 1" strip of paper along the winding and when you want a tap, run the wire over the paper. When finished, paint a little MRL Light Coil cement (comes with 2XM form) along the edges to keep wire from slipping. Drill 2 1/4" holes in the large ring of 2XM form - opposite each other,- one for the bushing and other for wires to come out. (3-4). Drill the rotor the same. Diagram shows how rotor is made. Wind 11 Ts #22 DCC wire - (5 on each side of shaft)and bring ends out to lugs on rotor- (or tie them well). Paint a little cement on rotor also.

ASSEMBLY: Drawings show pretty well how this is done. Use scale 1/4" to 1". Raise coil high as possible on panel, to get knob up so it is easy 2 work. You will notice the rotor is used only on 1 switch pt.- for interfering stations. Use switch lever to mark a circle for sw. pts.-then measure off 5/16" apart for pts. Drill. Run Ant. & Gnd. leads out rear - the phones in front. If you find the stations don't bother you, you can rewind the coil - and put it closer to the rotor.

OPERATION: Experience is the best teacher here. You will soon find all the combinations you can get with different knobs. When you get a stn. re-adjust crystal for best results. Use a good pair of phones, 20,000 ohms if possible - otherwise, 2000 Okeh. A good ground and aerial are essential for best results. In case you have too much interference, put a MRL QRM Coil in series with the aerial (or ground). MRL Steel Galena crystal works best - altho fixed Iron Pyrites is Okeh for locals.

When making inquiries, send stamped envelope.- Please report results. See "RADIO BUILDER" for prices, etc. -----M-R-L.